Environment and Ecology 44 (4A) : 1109—1114, October—December 2026
Article DOI: https://doi.org/10.60151/envec/QSYG7101
ISSN: 0970-0420 (Print), ISSN: 3049-3625 (Online)

Performance of Maize as Influenced by Weed Management through Atrazine and Mulching

Lakkineni Pranathi, D. Nongmaithem, Eshonthung Ngullie, A.P. Singh, Meribemo Y Khuvung, Nerendla Rajesh Goud

Received 30 July 2026, Accepted 3 November 2026, Published on 26 November 2026

ABSTRACT

An experiment was conducted at the experimental research farm of the School of Agricultural Sciences, Nagaland University, during the *kharif* season of 2024 to evaluate the effect of atrazine and different mulching materials on weed dynamics, growth attributes of maize (*Zea mays* L.) and soil microbial population. The results showed that atrazine integrated with plastic mulch recorded the lowest weed density and the highest weed-control efficiency (92.33% at 20 DAS), while hand weeding at 20 and 40 DAS achieved the greatest weed reduction at later stages (76.09% WCE at 60 DAS). Among organic mulches, atrazine + wood chips and atrazine + banana pseudostem maintained comparatively low weed density and dry matter, whereas atrazine + bamboo mulch remained the least effective. Among the treatments, atrazine @ 1 kg ha^{-1} + plastic mulch gave highest growth attributes at 20 DAS and hand weeding at 20 DAS and 40 DAS recorded the highest at 60 DAS. Various mulching practices had significant effect on soil microbial population where the soil fungi, bacteria and actinomycetes count found highest on atrazine @ 1 kg ha^{-1} + rice straw mulch @ 8t ha^{-1}. The incorporation of mulches after the application of atrazine is therefore found to be effective in suppressing weeds with microbial population which will increase the productivity of maize in Nagaland.

Keywords Atrazine, Hand weeding, Plastic mulch, Wood mulch, Microbial population.

Lakkineni Pranathi[1], D. Nongmaithem[2]*, Eshonthung Ngullie[3], Meribemo Y Khuvung[5]

[2]Assistant Professor
[1,2,3,5]Department of Agronomy, SAS, Nagaland University, India

A. P. Singh[4]

Professor
Department of Agronomy, School of Agril. & Development Central University of South Bihar, India

Nerendla Rajesh Goud[6]

Department of Agronomy, Assam Agricultural University, India

Email: debikanong@gmail.com
*Corresponding author

INTRODUCTION

Maize (*Zea mays* L.) or corn is the globe's one of the most common cereal grains surmised to have originated from Mexico and central America about 8700 years ago. Belonging to the family Poaceae, it is the principal food crop in several of the countries all over the globe, surpassing rice and wheat in terms of area, productivity, and yield. Having the highest genetic yield potential and nutritive value,

it is quite commonly referred to as the "Queen of Cereals''. (Durbar 2014) India holds a prominent position among maize-producing countries, ranking 4th globally in cultivated area and 7th in production, contributing around 4% of the world's area and 2% of total maize production (Sairam *et al.* 2023). A significant portion of maize production in India, roughly 47%, is allocated for poultry feed, while 13% serves as livestock feed and for human consumption, with additional percentages utilized for industrial purposes, starch production, processed foods, and export (Raghuwanshi *et al.* 2023).

Globally, maize yields an average of 5.7 metric tons per hectare, contributing significantly to food security and sustenance with an annual production of 1,163.5 million metric tonnes which is cultivated in over 160 countries covering approximately 203.5 million hectares in 2022. In India, maize cultivation spans more than 11.2 million hectares, with an impressive production of 37.7 million metric tonnes production during 2023-24 (Pal and Jat 2024). Among various biotic and abiotic factors that hinder maize production, weed is considered among the foremost factors restricting the maize crop yield. Weed management is crucial during the *kharif* season. Research indicates that potential yield loss in maize due to weeds can range from 18 to 65% by (Gharde *et al.* 2018). Further (Rani *et al.* 2020) observed and reported that early stage weed stress, which starts from 17 to 29 days after planting, significantly affects the growth parameters and grain yield of maize. In general, weed may vastly diminish maize yield and sometimes cause complete failure of the maize plant (Sharma and Rayamajhi 2022). Weed has devastating effects on quality reduction through the mixing of weed seeds, ultimately decreasing the valuation of the crop. It also affects crop yield by competing with the main crop plant for light, water, nutrient and sometimes producing chemicals that are considered harmful to the associated crop. Hence, weed is still considered a formidable economic problem in maize. To reduce the use of chemical herbicides, integrated weed management strategies are considered to be the future direction of weed management. physical, mechanical, biological and chemical weed control methods are commonly used in weed management. Each method has its applicable scenarios, and the implementation of integrated weed management strategies can lead to better weed control, improving crop yield and quality. Farmer practice of hand weeding is very time consuming, physically demanding, and not cost efficient for a farmer especially where labor is scarce than other methods while, an advantage of manual control is that it minimizes soil disturbance, and decreases the likelihood of erosion and seed germination.

Among the organic weed managements, mulches serve as effective tools for weed control employing various mechanisms such as light exclusion, the creation of physical barriers to seed emergence, and allelopathy. Mulching is a technique that can help control weeds by blocking sunlight and preventing weed seeds from germinating. Mulch materials encompass a wide range of options including clean straw, hay, manure, tar paper, sawdust, crop stubbles, and black plastic, among others. Residue mulching plays a vital role in weed suppression by forming a physical barrier that inhibits the emergence of new weeds and releasing allele chemicals into the soil. As they decompose organic mulches enrich the soil with nutrients and improve its structure and it reduces evaporation, keeping soil moist for longer and reducing water needs. When compared to usage of chemical herbicides as pre emergence and post emergence. Application of atrazine as a pre emergence herbicide and mulching with organic materials are less cost effective as organic mulches are easily available (Marble 2015).

MATERIALS AND METHODS

The field experiment was conducted at the Agronomy Research Farm of the School of Agricultural Sciences, Nagaland University, Medziphema, during the *kharif* season of 2024. The experiment was laid out in a Randomized Block Design with eight treatments and three replications (Fig. 1).

The treatments consisted of T_1: Weedy check, T_2: Hand weeding at 20 and 40 DAS, T_3: Atrazine @ 1 kg/ha + rice straw mulch @ 8 t/ha, T_4: Atrazine @ 1 kg/ha as PE + *Imperata cylindrica* mulch @ 8 t/ha, T_5: Atrazine @ 1 kg/ha as PE + bamboo clips @ 8 t/ha, T_6: Atrazine @ 1 kg/ha as PE + banana pseudostem

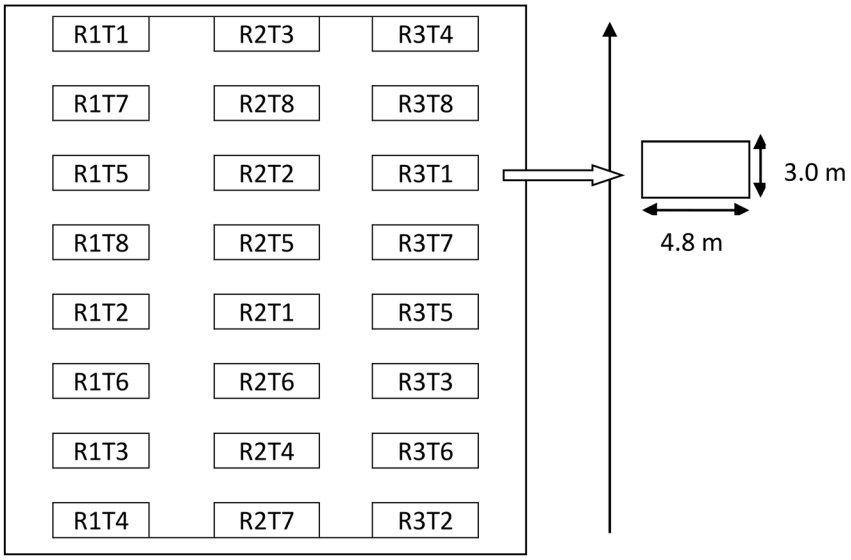

Fig. 1. Layout of the experimental plot in Randomized Block Design.

@ 8 t/ha, T_7: Atrazine @ 1 kg/ha as PE + wood chips @ 8 t/ha, and T_8: Atrazine @ 1 kg/ha as PE + plastic film mulch. The soil at experimental site was sandy loam in texture, having 193.20 kg/ha available N, 47.68 kg/ha available P and 296.12 kg/ha available K with 0.67% organic carbon and pH value of 4.72. The maize variety 'RCM-76' was sown using a seed rate of 20 kg/ha at a row spacing of 60 cm and plant spacing of 20 cm. A fertilizer dose of 80-60-40 kg N- P- K /ha was applied using urea, single superphosphate and muriate of potash. Hand weeding was carried out manually using a khurpi at the prescribed intervals, while atrazine was applied as pre-emergence in 500 L water per ha with knapsack sprayer fitted with a deflector nozzle. Organic mulches were applied uniformly after herbicide application, while plastic mulch was placed at sowing. Weed observation were recorded at interval 20, 40 and 60 DAS from a fixed 0.5 × 0.5 m quadrat in each plot, Weed dry matter was determined from quadrat samples collected at 20, 40 and 60 DAS, sun dried and oven dried at 60°C to constant weight and expressed as g/m^2.Weed control efficiency was calculated by using the formula WCE = Wc–Wt/ Wc × 100

Where, Wc = Dry weight of weeds per unit area in the unweeded control plot

Wt = Dry weight of weeds per unit area in the plot under treatment

Weed index was calculated by using

Weed index = X – Y/X * 100

Where, X = yield from two hand weeding plots

Y= yield from treatment plots

Soil microbial population fungi, bacteria and actinomycetes were analyzed by plate count method (serial dilution and plating) and results were given as cfu g^{-1}. All data were analyzed using ANOVA appropriate for RBD and treatment means were compared at the 5% level of significance using the F-test.

RESULTS AND DISCUSSION

Weed control efficiency (WCE) varied significantly among the treatments at both observation stages (Table 1). At 20 DAS, the maximum WCE was obtained with atrazine + plastic mulch (92.33%), indicating strong suppression of the initial weed flush. However, by 60 DAS, hand weeding at 20 and 40 DAS resulted in the highest WCE (76.09%), owing to the

Table 1. Effect of atrazine and organic mulch on weed control efficiency (%) and weed index (%).

Treatment	WCE (%)			Weed index (%)
	20 DAS	40 DAS	60 DAS	
T_1 – Weedy check	0.00	0.00	0.00	60.57
T_2 –Hand weeding at 20 DAS and 40 DAS	10.10	78.66	76.09	0.00
T_3– Atrazine @ 1 kg ha^{-1} as PE + rice straw mulch @ 8t ha^{-1}	40.54	53.01	68.43	34.84
T_4– Atrazine @ 1 kg ha^{-1}as PE +*Imperata cylindrica* mulch @ 8t ha^{-1}	37.34	43.34	64.56	51.23
T_5 – Atrazine @ 1 kg ha^{-1} as PE+ Bamboo clips mulch @ 8t ha^{-1}	21.85	43.76	48.98	57.44
T_6 – Atrazine @ 1 kg ha^{-1} as PE + Banana pseudo stem mulch @ 8t ha^{-1}	59.77	55.53	72.80	28.81
T_7– Atrazine @ 1 kg ha^{-1} as PE + wood chips mulch @ 8t ha^{-1}	61.98	57.43	73.59	24.26
T_8 –Atrazine @ 1 kg ha^{-1} as PE + plastic mulch	92.33	78.59	75.42	1.21

complete removal of both early and late-emerging weeds through sequential manual weeding operations. Among the mulching treatments, atrazine + plastic mulch, atrazine + wood chips mulch and atrazine + banana pseudostem mulch maintained relatively high WCE values (75.42%, 73.59% and 72.80%, respectively) at 60 DAS, demonstrating their sustained weed-suppressive action over time. In contrast, atrazine + bamboo clips mulch registered the lowest WCE among the mulched treatments, consistent with the higher weed dry matter recorded under this treatment. Weed index, which denotes yield loss relative to the hand-weeded plot, was lowest under atrazine + plastic mulch (1.21%), suggesting minimal reduction in yield due to effective weed suppression. This result was similar with (Kumaresan *et al.* 2023).

Among the treatments, atrazine @ 1 kg ha^{-1} as PE + plastic mulch gave highest plant height (103.81cm) at 20 DAS (Table 2) and it was statistically at par with atrazine @1 kg ha^{-1} as PE + wood chips mulching @ 8t ha^{-1} (102.38 cm), atrazine @ 1 kg ha^{-1} as PE + banana pseudostem mulching @ 8t ha^{1} (102.02 cm) and atrazine @1 kg ha^{-1} as PE + rice straw mulching @ 8t ha^{-1} (95.75 cm), atrazine @ 1kg ha^{-1}+*Imperata cylindrica* mulch @ 8t ha^{-1} and atrazine @1kg ha^{-1} + bamboo clips @ 8t ha^{-1}. This might be due to greater weed control throughout the

Table 2. Effect of atrazine and organic mulch of plant height (cm) and dry matter accumulation of maize (g plant^{-1}).

Treatment	Plant height			Dry matter accumulation		
	20 DAS	40 DAS	60 DAS	20 DAS	40 DAS	60 DAS
T_1–Weedy check	41.82	81.77	114.28	4.37	17.67	22.30
T_2 –Hand weeding at 20 DAS and 40 DAS	66.60	167.88	213.89	4.95	34.97	67.93
T_3–Atrazine @ 1 kg ha^{-1} as PE +Rice straw mulch @ 8t ha^{-1}	95.75	146.49	198.84	7.34	28.48	60.43
T_4–Atrazine @ 1 kg ha^{-1}as PE+*Imperata cylindrica* mulch @8t ha^{-1}	96.87	136.66	185.63	6.92	28.12	58.08
T_5 –Atrazine @ 1 kg ha^{-1} as PE + Bamboo clips mulch @ 8t ha^{-1}	94.84	131.38	171.26	6.75	24.16	57.89
T_6 – Atrazine @ 1 kg ha^{-1} as PE +Banana pseudo stem mulch @ 8t ha^{-1}	102.02	154.11	203.23	7.82	29.95	62.41
T_7–Atrazine @ 1 kg ha^{-1} as PE+ wood chips mulch @8t ha^{-1}	102.38	166.95	205.30	8.19	31.40	63.56
T_8 –Atrazine @ 1 kg ha^{-1} as PE + plastic mulch	103.81	173.20	211.03	8.87	33.00	64.52
SEm±	4.72	9.53	16.02	0.26	0.76	1.53
CD (P=0.05)	14.31	28.91	48.59	0.81	2.31	4.64

Table 3. Effect of atrazine and organic mulch on leaf area index (LAI) of maize and soil microbial population.

Treatment	Leaf area index 20 DAS	40 DAS	60 DAS	Fungi 10^{-4} (cfu g^{-1})	Bacteria 10^{-6} (cfu g^{-1})	Actinomycetes 10^{-9} (cfu g^{-1})
T_1– Weedy check	0.07	0.16	0.47	10.95	24.13	1.24
T_2 –Hand weeding at 20 DAS and 40 DAS	0.16	1.88	3.59	17.34	40.99	1.76
T_3– Atrazine @ 1 kg ha $^{-1}$ as PE +Rice straw mulch @ 8t ha^{-1}	0.46	0.71	1.25	22.34	70.01	4.65
T_4– Atrazine @ 1 kg ha^{-1} as PE +*Imperata cylindrica* mulch @8t ha^{-1}	0.40	0.56	1.06	14.32	55.67	1.35
T_5 –Atrazine @ 1 kg ha^{-1} as PE + Bamboo clips mulch @ 8t ha^{-1}	0.35	0.47	1.00	16.54	41.46	1.55
T_6 –Atrazine @ 1 kg ha $^{-1}$ as PE + Banana pseudo stem mulch @ 8t ha^{-1}	0.56	0.92	1.52	17.86	40.70	2.15
T_7– Atrazine @ 1 kg ha^{-1} as PE +Wood chips mulch @8t ha^{-1}	0.70	1.76	2.99	20.34	65.47	3.62
T_8 –Atrazine @ 1 kg ha^{-1} as PE +Plastic mulch	0.61	1.82	3.40	17.56	66.75	2.00
SEm±	0.02	0.06	0.21	0.36	2.37	0.03
CD (P=0.05)	0.07	0.17	0.65	1.10	7.19	0.10

crop's early stages of growth, which gave the best environment to plants possible to use their available resources efficiently, resulting in better crop growth. This similar finding was reported by (Timsina *et al.* 2024) where different mulching treatments had significant effect on all yield-related traits of maize crop. However at 60 DAS, two hand weeding at 20 and 40 DAS gave highest plant height (213.89 cm) and it was found to be at par with atrazine @ 1 kg ha^{-1} as PE+ plastic mulch (211.03 cm) atrazine @ 1 kg ha^{-1} as PE + wood chips mulching @ 8t ha^{-1} (205.30 cm), atrazine @ 1 kg ha^{-1} as PE + banana pseudostem mulching @8t ha^{-1}, (203.23 cm), atrazine @1 kg ha^{-1} as PE + rice straw mulching @ 8t ha^{-1} (198.84 cm), atrazine @ 1kg ha^{-1}+ *Imperata cylindrica* mulch @8t ha^{-1} (185.63 cm), and atrazine @ 1 kg ha^{-1} + bamboo clips @ 8t ha^{-1} (171.26 cm). Hand weeding was done during the critical crop weed competition period which resulted in lowest weed competition to crop plants and thereby obtained increased plant height. Variation on dry matter accumulation (g $plant^{-1}$) was found significant due to different treatments. Atrazine @ 1 kg ha^{-1} as PE + plastic mulch recorded highest plant dry matter (8.87 g $plant^{-1}$) at 20 DAS which was at par with atrazine@1 kg ha^{-1} as PE + wood chips mulching @ 8t ha^{-1}. This could be the result of better management of weeds through the use of pre-emergence herbicide and mulching, which allow plants to flourish unhindered by weed competition. However at 40 and 60 DAS, two hand weeding at 20 and 40 DAS recorded highest plant dry matter (34.97 g and 67.93 g $plant^{-1}$ respectively) which can be seen as presented in Table 2. It was found to be at par with atrazine @1 kg ha^{-1} as PE + plastic mulch (64.52 g $plant^{-1}$) and atrazine @ 1 kg ha^{-1} + wood chips mulch @ 8t ha^{-1}(63.56 g $plant^{-1}$). This may be because weeds are more effectively managed by manual hand weeding, which allow plants to grow freely without competition with weeds. This finding was in accordance with (Saini *et al.* 2023).

Different treatments on leaf area index of maize were found to be significant (Table 3). An analysis of data showed that at 20 DAS, Atrazine @ 1 kg ha^{-1} as PE + wood chips mulch @ 8t ha^{-1} recorded highest leaf area index (0.70) followed by atrazine @ 1 kg ha^{-1} as PE+ plastic mulch (0.61) at 20 DAS which is significantly at par with Atrazine @ 1 kg ha^{-1}as PE + banana pseudostem mulching @ 8t ha^{-1}(0.56). However at 40 and 60 DAS, two hand weeding at 20 and 40 DAS showed highest leaf area index (1.88 and 3.59 respectively) which is statistically at par with atrazine @ 1 kg ha^{-1} as PE + plastic mulch (1.82 and 3.40 respectively) and atrazine @1 kg ha^{-1}+ wood chips mulch @ 8t ha^{-1}(1.76 and 2.99 respectively) This similar findings were also reported by (Gul *et al.* 2014) where the highest leaf area $plant^{-1}$was obtained in the hand weeding treatment and black plastic

mulch. Various mulching practices on soil had significant effect on soil microbial population where the soil fungi, bacteria and actinomycetes count found higher on atrazine @1 kg ha^{-1}+ rice straw mulch @ 8t ha^{-1} (soil fungi 22.3×10^{-4}, soil bacteria 70.01×10^{-6} actinomycetes 4.65×10^{-9}), and atrazine @ 1 kg ha^{-1} +wood chips mulch @ 8 t/ha (soil fungi 20.34×10^{-4}, soil bacteria 65.47×10^{-6}, actinomycetes 3.62×10^{-9}), atrazine @ 1 kg ha^{-1} + banana pseudo stem mulch @ 8t ha^{-1} (soil fungi 17.86×10^{-4}, soil bacteria 40.70×10^{-6} actinomycetes 2.15×10^{-9}). Highest bacterial count was recorded in atrazine @ 1 kg ha^{-1} + rice straw mulch @ 8t ha^{-1} followed by plastic mulch where the soil temperature favors bacterial growth as presented in Table 3. These similar findings were found with (Miaomiao *et al.* 2021) and (Manna *et al.* 2024) where straw incorporation increases soil microbial activity response of soil fungi to straw incorporation under plastic film mulching where the number of fungi in soil is relatively low compared with bacteria.

CONCLUSION

From the experiment, it is concluded that Maize response well to application of Atrazine along with plastic mulch where it could control weeds comparable to two times hand weeding. Due to better weed management, it gave better plant growth parameters which will reflect the yield of the crop. However, under microbial study, it was found that application of atrazine along with rice straw mulch gave highest value. It is pertinent from the study that for weed management in maize, herbicide application integrated with mulch could possibly save resources and serve as sustainable weed management practices in Nagaland condition.

REFERENCES

Durbar, S. (2014). Statistical information on Nepalese agriculture. Retrieved December, 1, 2015.

Gharde, Y., Singh, P. K., Dubey, R. P. & Gupta P. K. (2018). Assessment of yield and economic losses in agriculture due to weeds in India. *Crop Protection*,107, 12—18.

Gul, B., Marwat, K. B., Khan, M. A., & Khan, H. (2014). Impact of tillage, plant population and mulches on phenological characters of maize. *Pakistan Journal of Botany*, 46 (2), 549—554.

Kumaresan, M., Selvakumar, T., Satheeshkumar, N., Sheela, K. S., & Janaki, P. (2023). Non-chemical weed management in maize: An innovative way of weed management. *Pharma Innovation*, 12 (9), 2571—2574.

Manna, K., Kundu, M. C., Saha, B., & Ghosh, G. K.(2024). Residual impact of nonwoven jute agro-textile mulch on soil health and productivity of maize (*Zea mays* L.) in lateritic soil. *Biomass Conversion and Biorefinery*, 14 (19), 23667—23677.

Marble, S. C. (2015). Herbicide and mulch interactions: A review of the literature and implications for the landscape maintenance industry. *Weed Technology*, 29 (3), 341—349.

Pal, B., & Jat, S. L. (2024). Enhancing state-wide corn (*Zea mays* L.) productivity by bridging the yield gap between top and average farmers in India.

Raghuwanshi, M., Jha, A. K., Verma, B., Yadav, P. S., Shrivastava, A. (2023) Weed dynamics of fodder maize as influenced by different herbicides. *International Journal of Environment and Climate Change*, 13 (7), 245—251.

Rani, B. S., Chandrika, V., Sagar, G. K., & Reddy, G. P. (2020). Weed management practices in maize (*Zea mays* L.): A review. *Agricultural Reviews*, 1 (4), 328—337.

Saini, R., Sarmah, A. K., Dutta, R., Paul, S., Sharma, P. K., Choudhary, R., & Kumar, A. (2023). Influence of Integrated Weed and Nutrient Management on Productivity and Profitability of Summer Maize (*Zea mays*) Under Rainfed Condition of Assam, India. *International Journal of Environment and Climate Change*, 13 (12), 37—45.

Sairam, G, Jha, A. K., Verma, B., Porwal, M., Dubey, A., & Meshram, R.K. (2023). Effect of mesotrione 40% SC on weed growth, yield and economics of maize (*Zea mays* L.). *International Journal of Environment and Climate Change*, 13 (7), 608—616.

Sharma, N., & Rayamajhi, M. (2022). Different aspects of weed management in maize (*Zea mays* L.): A brief review. *Advances in Agriculture*, (1), 7960175.

Timsina, D., Sah, S. K., & Adhikari, P. (2024). Weed Management in Maize: Mulching is a Next Alternative to Herbicide. *Far Western Review*, 2 (2), 72—90.

Miaomiao, Z., Guoxiong, Z., Yuze, L., Qing, W., Pengfei, D., Xiaoliang, Q., Yufeng, Z., Yinglong, C. & Kadambot, S. H. M. (2021). Straw incorporation with ridge–furrow plastic film mulch alters soil fungal community and increases maize yield in a semiarid region of China. *Applied Soil Ecology*, 167, (104038).